Paper holder (WJC235A0058001)

Cosmic · Architect S+

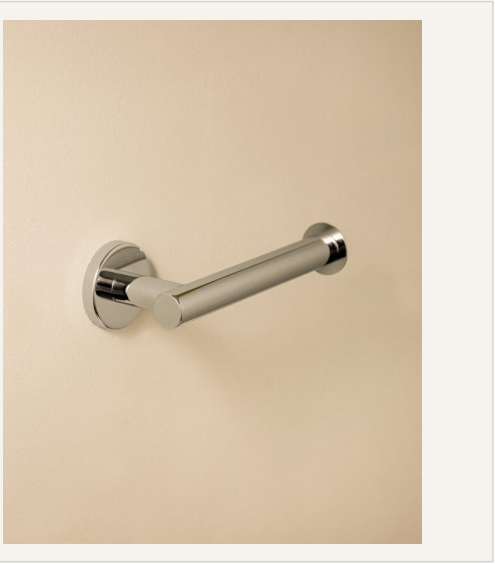

BRAND	Cosmic
BRAND ORIGIN	Spain
COLLECTION	Architect S+
PRODUCT	Paper holder
ITEM CODE	**WJC235A0058001**
FINISH	TBC
OVERALL DIMENSIONS	160 × 95 × 55 mm

TECHNICAL DRAWING

Dimensions in cm, as supplied by Cosmic

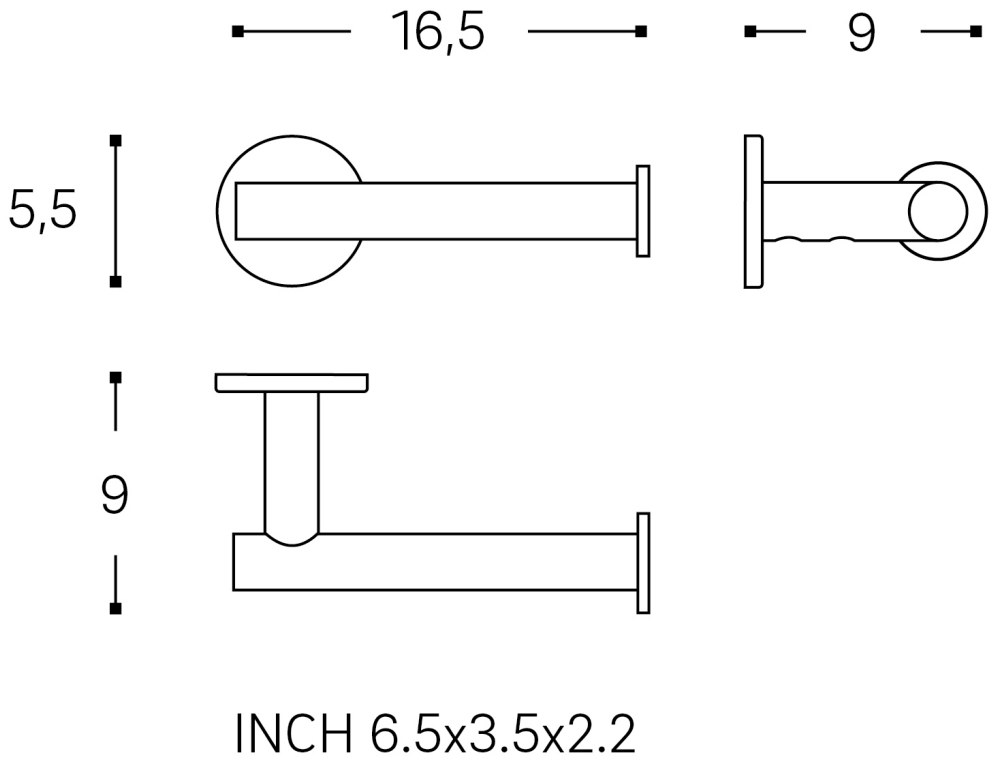

SPARE PARTS

No spare parts are listed by Cosmic for this item. Contact M&T Gulf for replacement parts or after-sales support.